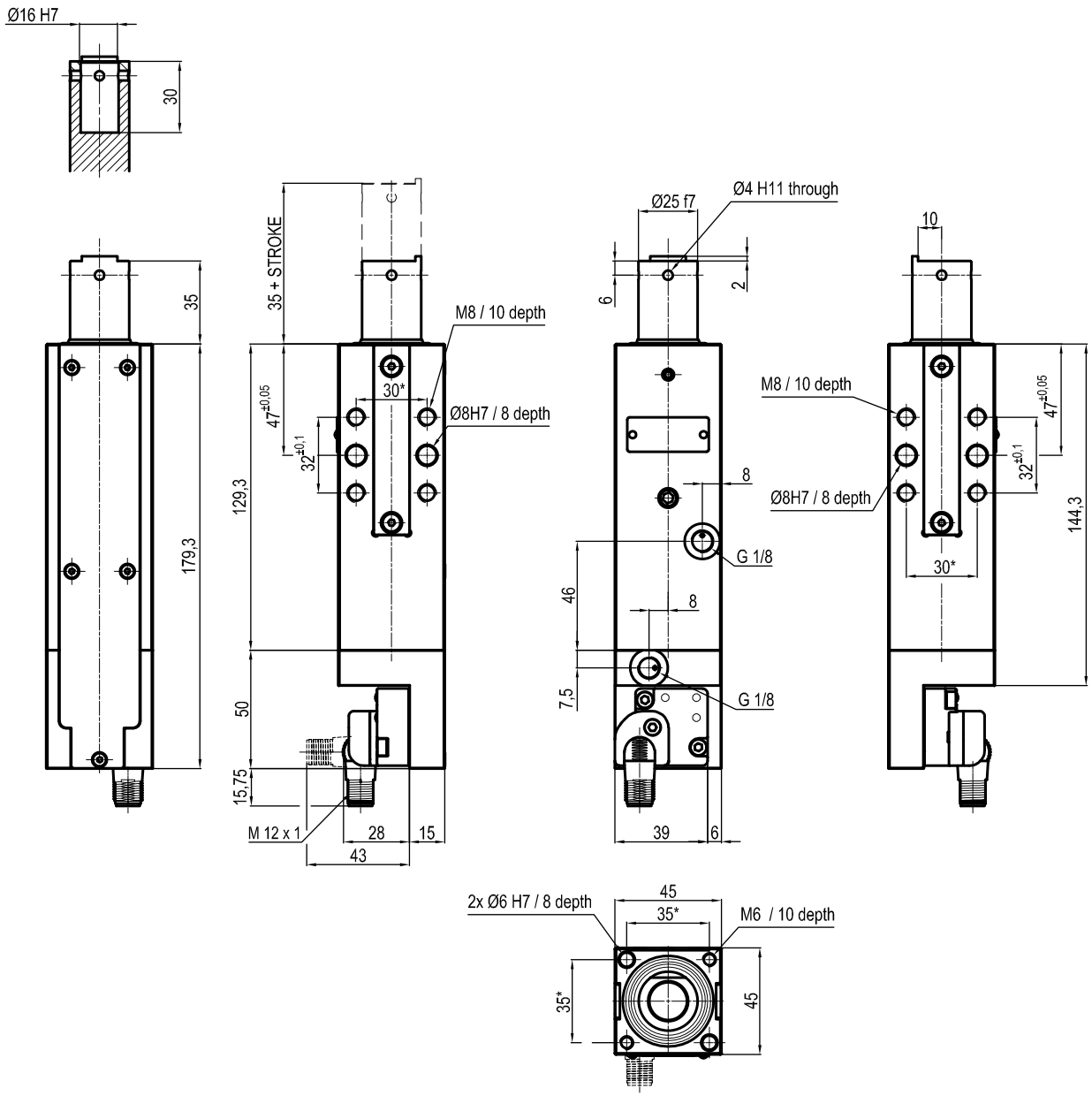

ULB32 _ _ _ BK0

4 STROKE

4

020 = 20 mm
040 = 40 mm

Bore Ø	Max. pull force 0,5 MPa	Max. push force 0,5 MPa	Max. torque 6 Nm X=100 mm	Max. deflection moment 5,5 Nm X=100 mm	Weight
32 mm	300 N	390 N	± 0,06 mm	± 0,03 mm	1,0 Kg

* : TOLERANCE BETWEEN DOWELS ± 0,02, BETWEEN SCREW HOLES ± 0,1

Min./Max. operating pressure: **0,4 / 0,6 MPa**
Operating temperature: **5°÷ 45° C**
Strokes in mm.: **20 - 40**
Electronic sensor with M12 swivel connector, from 0° to 90°
Supply voltage: **10 ÷ 30 Vdc**
IP code: **IP 65**

Subject to technical modifications without notice

Rev. 00 26.05.20

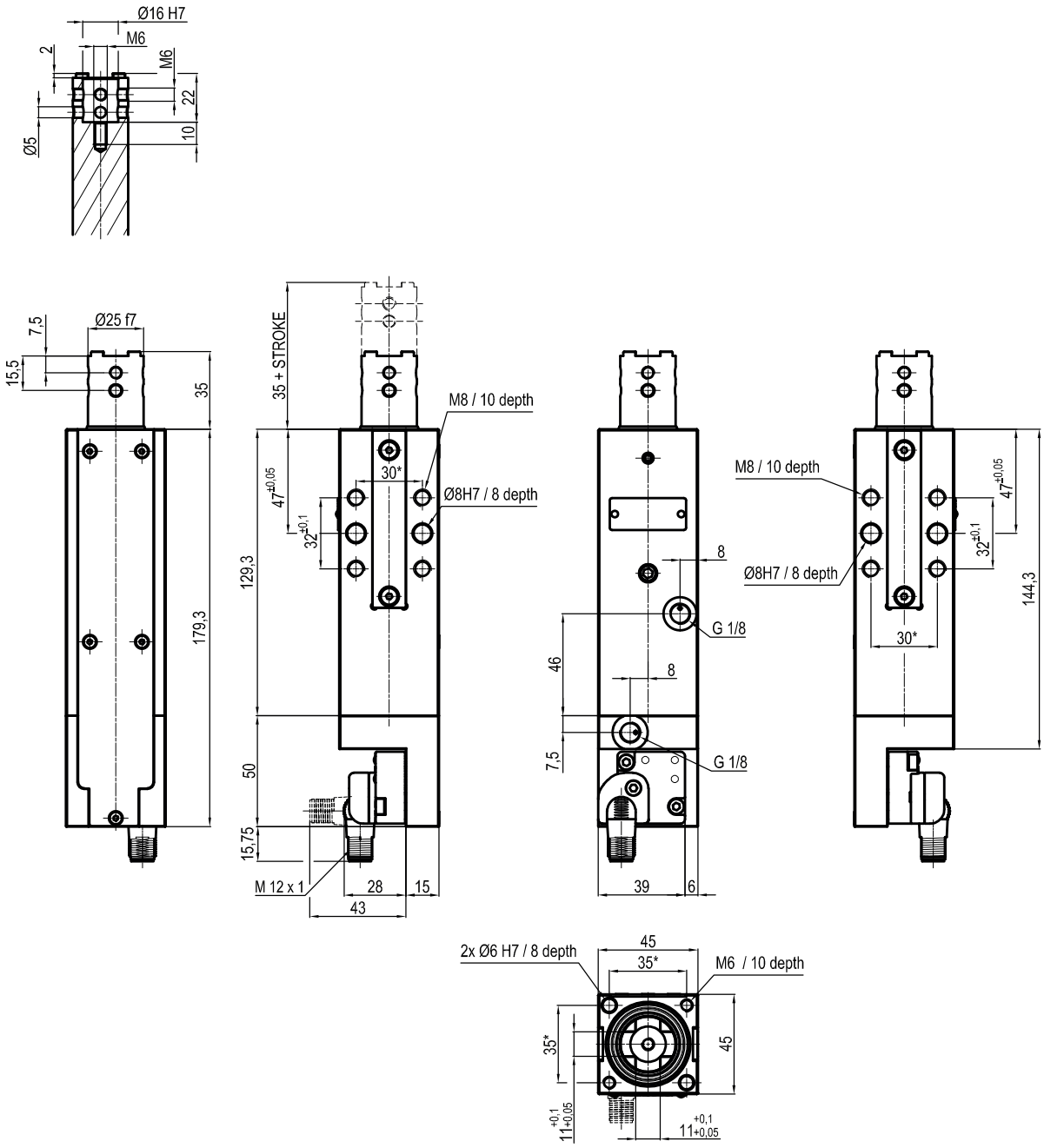

ULB32 _ _ _ BK0

4 STROKE

4

020 = 20 mm
040 = 40 mm

Bore Ø	Max. pull force 0,5 MPa	Max. push force 0,5 MPa	Max. torque 6 Nm X=100 mm	Max. deflection moment 5,5 Nm X=100 mm	Weight
32 mm	300 N	390 N	± 0,06 mm	± 0,03 mm	1,0 Kg

Min./Max. operating pressure: **0,4 / 0,6 MPa**
Operating temperature: **5°÷ 45° C**
Strokes in mm.: **20 - 40**
Electronic sensor with M12 swivel connector, from 0° to 90°
Supply voltage: **10 ÷ 30 Vdc**
IP code: **IP 65**

* : TOLERANCE BETWEEN DOWELS ± 0,02, BETWEEN SCREW HOLES ± 0,1

Subject to technical modifications without notice

Rev. 00 01.08.18

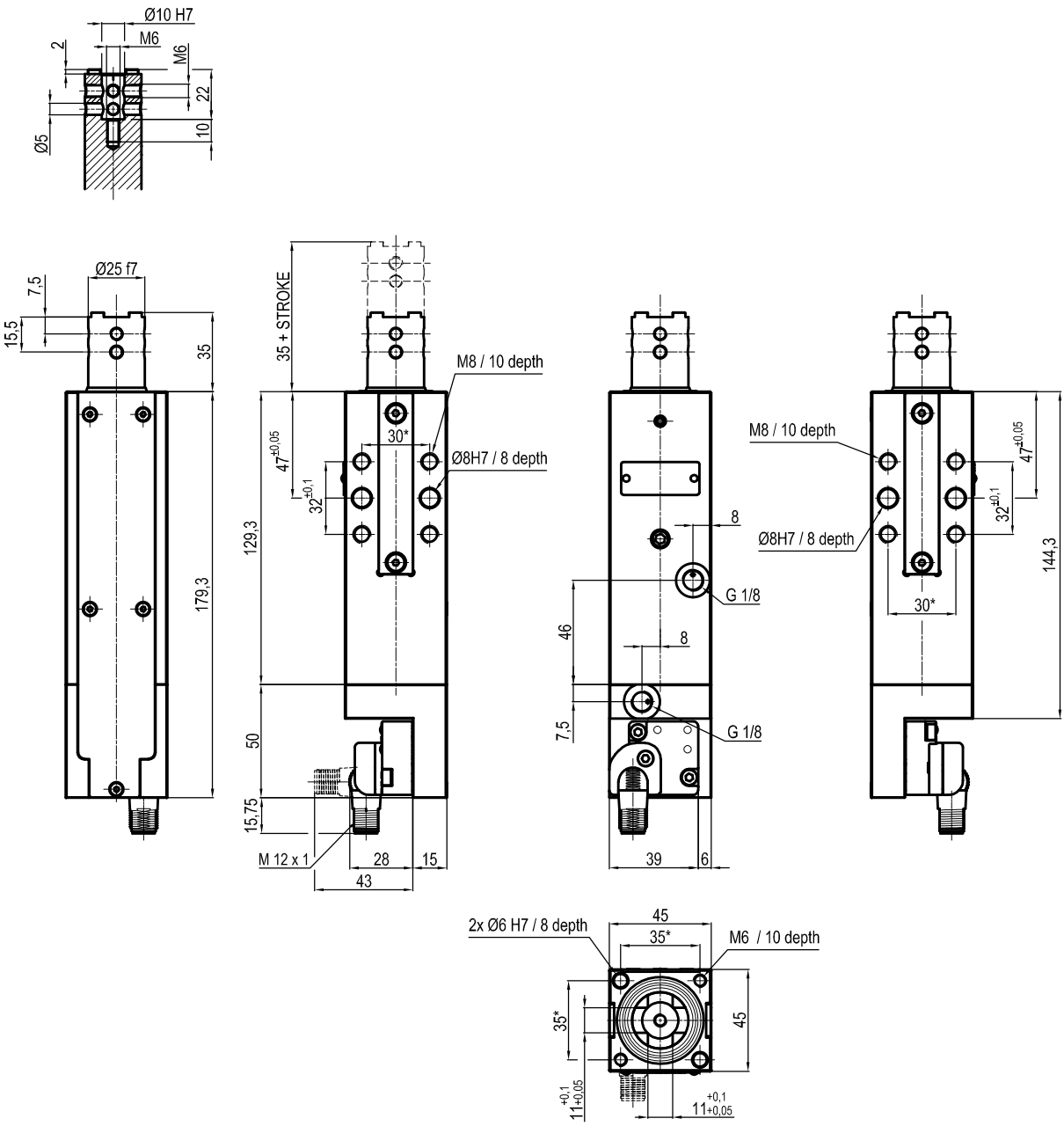

ULB32 _ _ _ BK0

4 STROKE

4

020 = 20 mm
040 = 40 mm

Bore Ø	Max. pull force 0,5 MPa	Max. push force 0,5 MPa	Max. torque 6 Nm X=100 mm	Max. deflection moment 5,5 Nm X=100 mm	Weight
32 mm	300 N	390 N	± 0,06 mm	± 0,03 mm	1,0 Kg

Min./Max. operating pressure: **0,4 / 0,6 MPa**
Operating temperature: **5°÷ 45° C**
Strokes in mm.: **20 - 40**
Electronic sensor with M12 swivel connector, from 0° to 90°
Supply voltage: **10 ÷ 30 Vdc**
IP code: **IP 65**

* : TOLERANCE BETWEEN DOWELS ± 0,02, BETWEEN SCREW HOLES ± 0,1

Subject to technical modifications without notice

Rev. 00 22.05.20