| ABSOLUTE ENCODER WITH FIELD BUS **963P** | Compact absolute encoder for industrial ambients. PROFIBUS-DP interface.<br>Standard 'size 25' metallic housing with square flange.<br>High resolution and very good quality/price ratio. | Absolute with field bus<br>page: 07.963P 1/2<br>data sheet IB 052 E00 |
|---|---|---|

Measures without tolerance acc. to UNI ISO 2768-mk

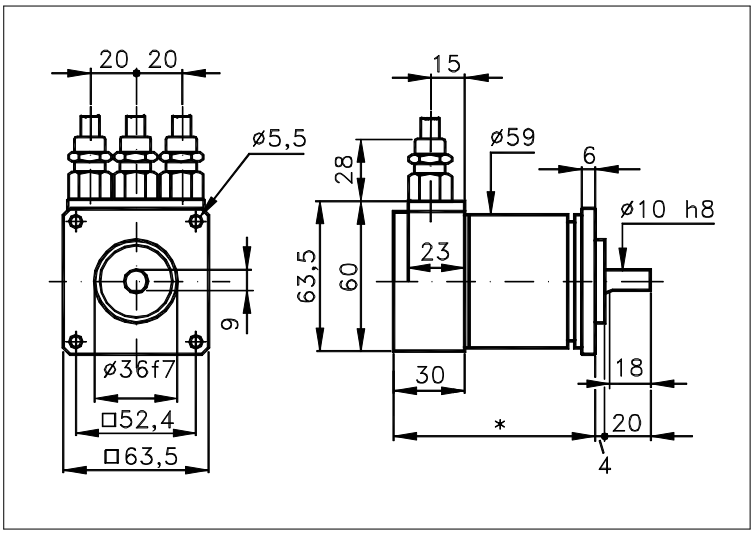


* 82 Singleturn, 92 Multiturn

## TECHNICAL FEATURES AND POSSIBLE CONFIGURATIONS

- **Outout codes**.....: Binary
- **Max resolut**.....: 16 bit/1 rev.
  : 30 bit/16384 rev.
- **Pulses/rev**.....: (12) 4096, (13) 8192,
  (14) 16384,(15) 32768,
  (16) 65536.
- **No. of rev**.....: 1, 4096, 16384.
  :
- **Power supply Vcc**.....: 10÷30 VDC
- **Max consumption**.....: 2,5 W
- **Light source**.....: LED with >= 100000 h life
- **Optical sensors**.....: IR photodiodes array
- **Step frequency LSB**....: 800 kHz
- **Operating temperature**.: -40 ÷ +85 °C
- **Storage temperature**...: -40 ÷ +85 °C
- **Humidity**.....: 98% (without liquid state)
- **Bus connection**.....: Line driver (acc. to RS485)
- **Status indic. with 2 LEDs**
- **Accuracy of divisions**.: ±½ LSB(<13bit),±2 LSB(13÷16bit)
- **Output interface**.....: (DP) Profibus-DP Class2

- **Connections** : For the codes and the descriptions of connectors see 'ORDERING CODE' on page 2.
- **Housing**.....: Aluminium (*)
- **Weight**.....: singlet.550g ,multit. 600 g
- **Shaft**.....: Stainless steel
- **Max radial/axial load**.: 40/110 N
- **IP output side**.....: see 'CONNECTIONS' on page 2
- **IP shaft side**.....: std.64 | sealed 66
- **Contin. max RPM...(**)**: 6000 | 3000
- **Starting torque..gcm.**: 50 | 90
- **Impact resistance**.....: 30 G (11 ms)
- **Vibration resistance**..: 10 G (10 ÷ 1000 Hz)
- **Ball bearings life**....: >10^5 h @ 1000 rev./m
- **400x10^6 write cycles**
- **Polarity inversion protect.**
- **Over voltage peak protect.**
- **Disc made of unbreakable and durable plastic.**
- **EMC certific. according to EN 61000-6-2,EN 61000-6-4**
- **Max transmis. rate 12 MBaud**
- **Address progr. with selectin the junction terminal.**

(*) Custom options.
(**) Intermittent max RPM + 30% of continuous max RPM.

## POSSIBLE OPTIONS

| CODE | DESCRIPTION | CODE | DESCRIPTION | CODE | DESCRIPTION |
|---|---|---|---|---|---|
| Q | All stainl. steel | W | Sealed ball bear. | X | Customer options |


elcis

ELCIS s.r.l. Via Rosa Luxembourg 12/14 10093 COLLEGNO (TO) ITALY
Phone: +39 011 715577/78 r.a.
MAIL: ELCIS s.r.l. P.O.Box 90 10093 COLLEGNO (TO) ITALY

* http://www.elcis.com
* e-mail: info@elcis.com
* Fax: +39 011 712613

## INTERFACE

» (DP) Profibus-DP Class2

Programmable Parameters: Direction of rotation (complement); Resolution per revolution; Total resolution; Preset value; Output of velocity; Software Limit Switches.

»

»

»

## CONNECTIONS

» Internal/external views of the connection cap 3PG with 2 LEDs

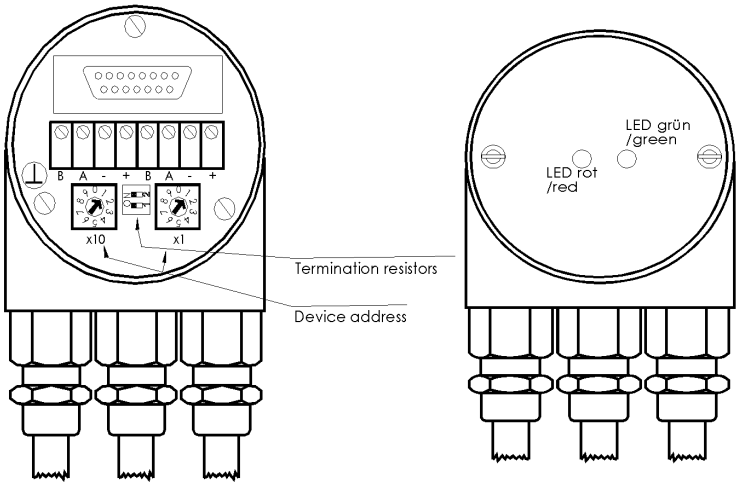


## ORDERING INFORMATION

| | | | | | | | |
|---|---|---|---|---|---|---|---|
| ( 00 ) | 1(Singlet.) | ( 10 ) | Ø 10 (standard) | (Q) | All stainl. steel | ( 3PG ) | Connection cap IP65 |
| ( 12 ) | 4096 | ( ) | | (X) | Customer options | (3PG-VA) | Stainl. steel conn. cap IP65 |
| ( 14 ) | 16384 | ( ) | | (W) | Sealed ball bear. | ( 2M20 ) | Conn. cap with 2 cables IP65 |
| | | ( ) | | ( ) | | ( ) | |
| | | ( ) | | (0) | Standard | ( ) | |
| | | ( ) | | | | ( ) | |
| | | ( ) | | | | ( ) | |
| | | | | | | ( ) | |
| | | | | | | ( ) | |

| MODEL | STEP PER REVOL. | | No. OF REVOL. | | POSSIBLE SHAFT Ø | | CODE | | INTERFACE | | OPTIONS | | CONNECTION |
|---|---|---|---|---|---|---|---|---|---|---|---|---|---|
| 963P | 12 | / | 12 | / | 10 | / | B | / | DP | / | 0 | / | 3PG |

(DP) Profibus-DP Class2

Binary (12) 4096, (13) 8192, (14) 16384, (15) 32768, (16) 65536.

( ) (B) Binary ( ) ( )

Product manufactured according to UNI EN ISO 9001:2000, supplied with CHECKING and CONFORMITY declaration with CE mark and with TWO (2) YEARS WARRANTY starting from delivery date.

COPYRIGHT by ELCIS - Collegno (TO)



elcis
ELCIS s.r.l. Via Rosa Luxembourg 12/14 10093 COLLEGNO (TO) ITALY
Phone: +39 011 715577/78 r.a.
MAIL: ELCIS s.r.l. P.O.Box 90 10093 COLLEGNO (TO) ITALY
* http://www.elcis.com
* e-mail: info@elcis.com
* Fax: +39 011 712613