MLL−55

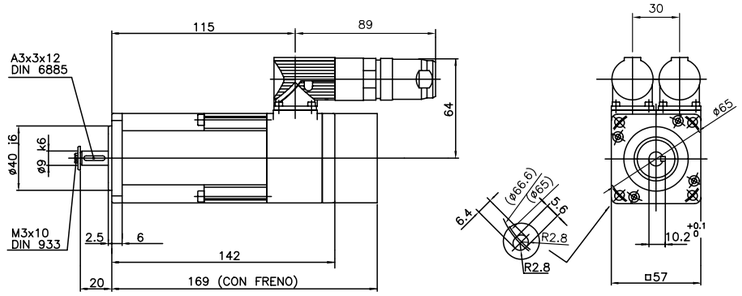

MLL−70

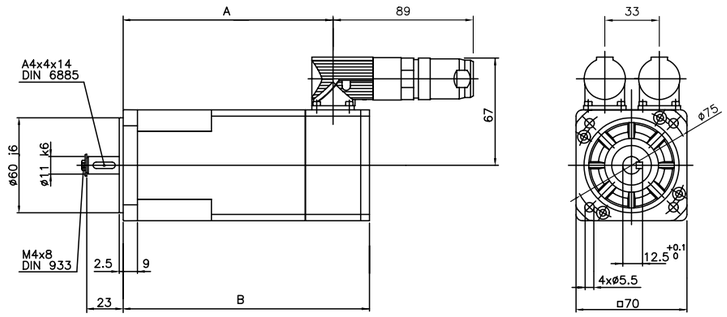

	MOTOR WHITHOUT BRAKE		MOTOR WHITH BRAKE	
	A	B	A	B
MLL−71	107	138.5	107	162
MLL−72	147	178.5	147	202

MLL−115

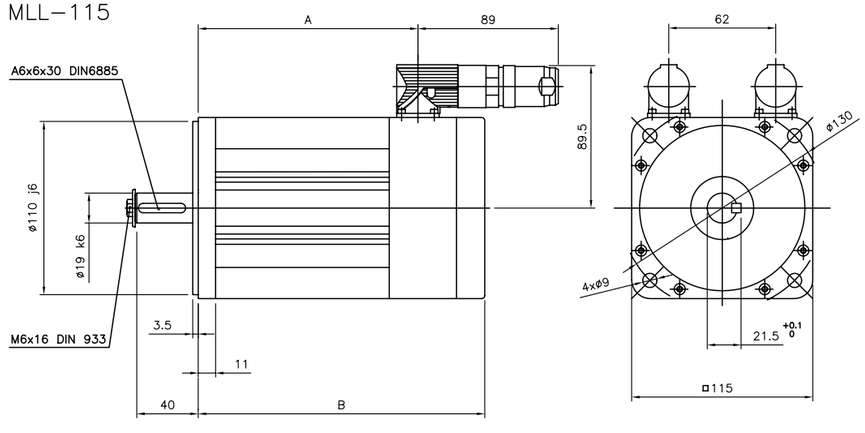

	MOTOR WHITHOUT BRAKE		MOTOR WHITH BRAKE	
	A	B	A	B
MLL−115.1	136.5	180.5	136.5	180.5

CHARACTERISTICS	SYMBOL	UNITS	MLLS-55	MLLS-71	MLLS-72	MLLP-115.1	MLLP-115.2	MLLP-115.3
Max speed	n	rpm	12000	12000	12000	9000	9000	9000
Stall Torque (± 10%) (*)	Ms	Nm	0,9	1,7	3,2	6,5	8,8	11
Stall Current (± 10%)	Is	A	2,36	2,74	4,20	4,24	5,00	6,61
Peak Torque (± 10%)	Mj	Nm	3,6	6,8	12,8	26	32	44
Torque-Weight Ratio	Tw	Nm/kg	0,60	0,89	1,10	1,08	1,24	1,36
EMF Constant (±5%)	Ke	Vs/rad	0,22	0,36	0,44	0,88	0,92	0,96
Torque Constant (±5%)	Kt	Nm/A	0,38	0,62	0,76	1,53	1,60	1,67
Cogging Torque	Ct	Nm	0	0	0	0	0	0
Winding Resistance (± 5%)	R	Ω	7,5	8,5	4,7	4,8	3,5	2,8
Winding Inductance (± 5%)	L	mH	2,3	3,2	2	3,4	2,5	2,0
Rotor Inertia	J	$kgm^2 10^{-3}$	0,066	0,137	0,269	1,35	1,78	2,3
Mechanical Time Constant	Tm	ms	5,905	5,246	3,770	4,74	4,22	4,07
Electrical Time Constant	Te	ms	0,307	0,376	0,426	0,71	0,71	0,71
Thermal Time Constant	Tth	s	1666	1831	1806	3070	2773	3110
Thermal Resistance	Rth	ºc/W	1,26	0,83	0,64	0,65	0,64	0,45
Mass	M	kg	1,5	1,90	2,90	6,00	7,10	8,10
Radial load (at mid length of shaft and 3000rpm)	Fr	N	250	220	255	450	500	550
Axial load	Fa	N	100	98	98	250	250	250
Insulation			F	F	F	F	F	F
Max. working temperature			150ºc	150ºc	150ºc	150ºc	150ºc	150ºc